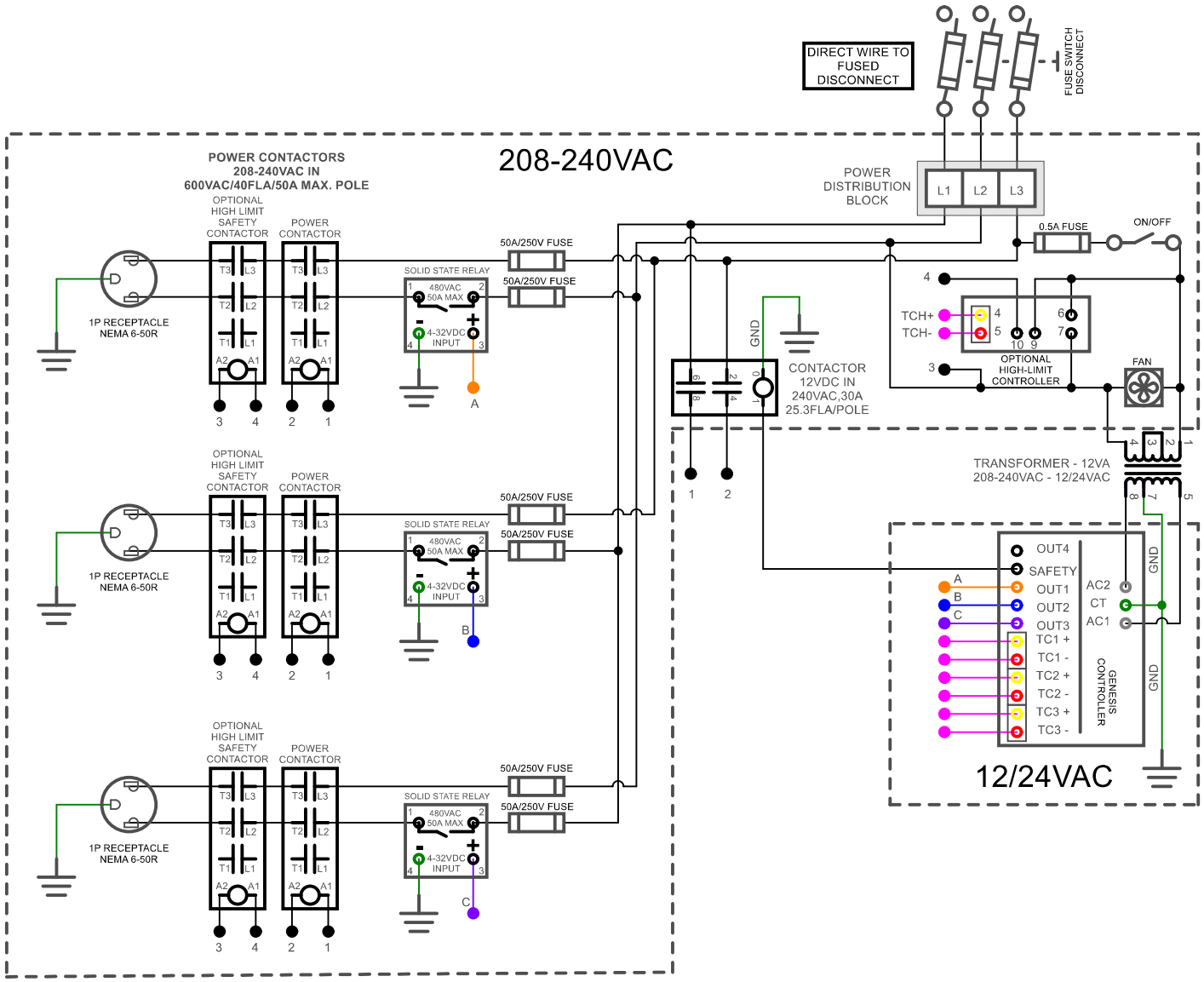

Industrial & commercial applications may require the installation of a LOCKOUT/TAGOUT device to prevent the kiln from operating during maintenance.

This kiln is recommended to be wired & connected to an approved U. L. & NEC configured receptacle controlled with a disconnect switch and properly fused according to the kW load specification listed on the kiln nameplate. L&L Kiln Mfg., Inc., also recommends fuses rather than circuit breakers to prevent nuisance tripping.

WIRE GAUGES	
Power	6AWG / 150°C / 600V
Control	16-22AWG / 105°C / 600V
Power Supply Wire Gauge assumes 75°C Copper Wire. See hotkilns.com/wire-size.	

T3427, 208-240V, 3 PHASE (P0035)			L&L KILNS
			505 Sharptown Road Swedesboro NJ 08085
			service@hotkilns.com
			(856)-294-0077
A	02/04/2026		Drawn by: AF
Rev.	Date	Description	P0072