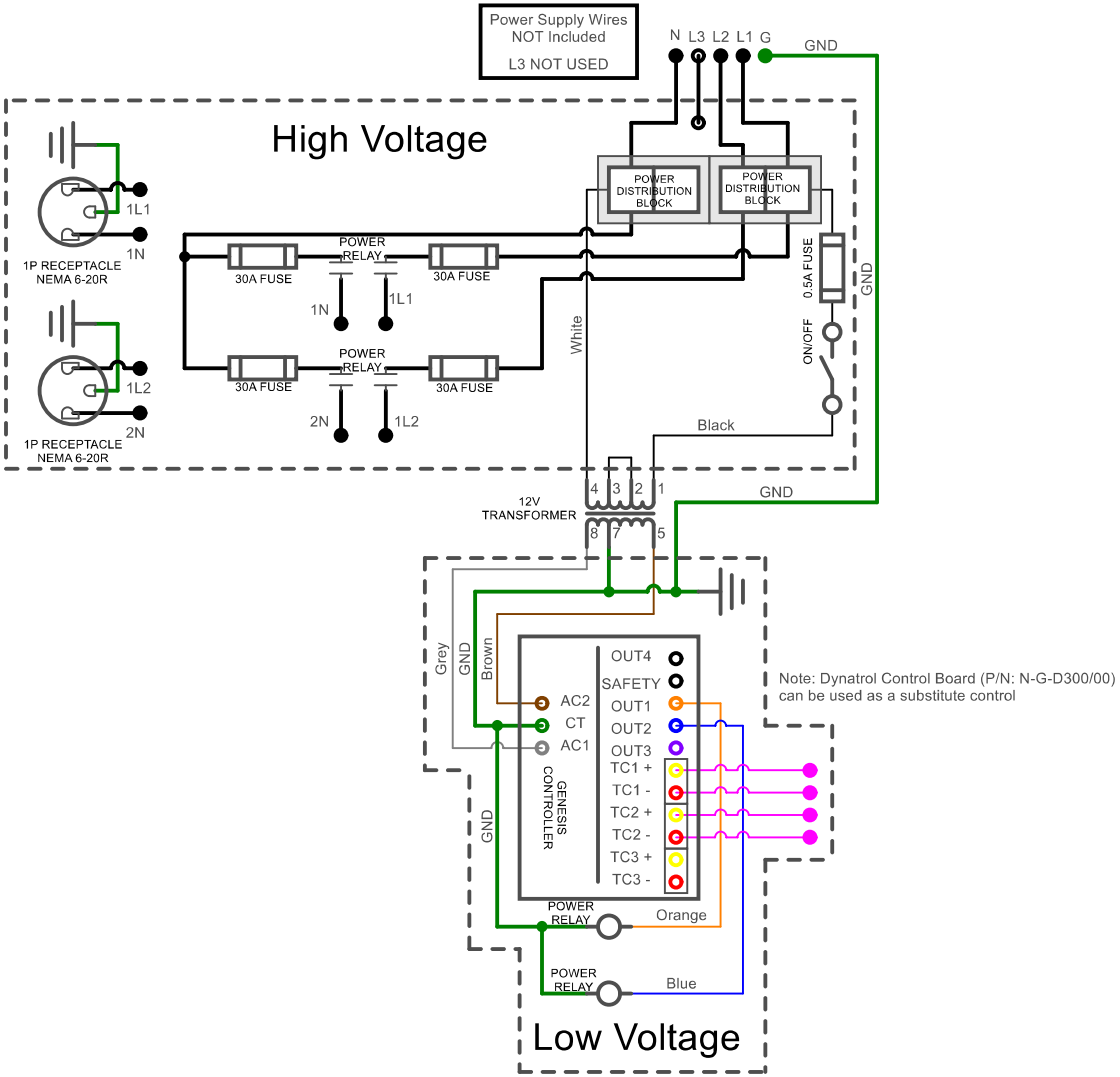

Note: Dynatrol Control Board (P/N: N-G-D300/00) can be used as a substitute control

Industrial & commercial applications may require the installation of a LOCKOUT/TAGOUT device to prevent the kiln from operating during maintenance.

This kiln is recommended to be wired & connected to an approved U. L. & NEC configured receptacle controlled with a disconnect switch and properly fused according to the kW load specification listed on the kiln nameplate. L&L Kiln Mfg., Inc., also recommends fuses rather than circuit breakers to prevent nuisance tripping.

Wiring Information	
Power	14AWG / 150°C / 600V
Control	16-22AWG / 105°C / 600V
Power Supply Wire Gauge assumes 75°C Copper Wire. See hotkilns.com/wire-size.	

JD23 3 Phase Wye			L&L KILNS
			505 Sharptown Road Swedesboro NJ 08085
			service@hotkilns.com
			(856)-294-0077
A			Drawn by: JS
Rev.	Date	Description	P0002