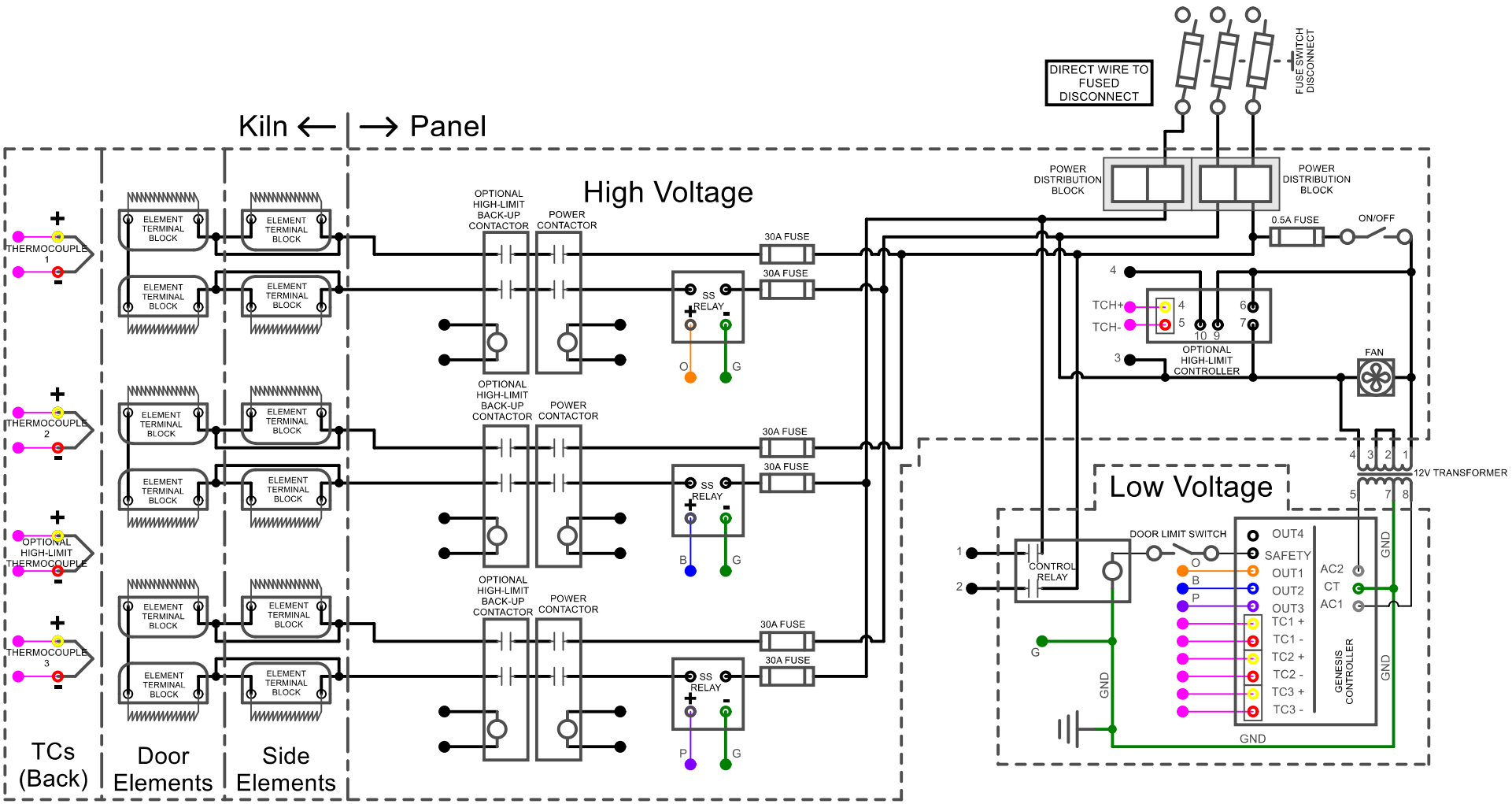

Wiring Information	
Power	6AWG / 150°C / 600V
Control	16AWG / 105°C / 600V
Power Supply Wire Gauge assumes 75°C Copper Wire. See hotkilns.com/wire-size.	

Industrial & commercial applications may require the installation of a LOCKOUT/TAGOUT device to prevent the kiln from operating during maintenance.

This kiln is recommended to be wired & connected to an approved U. L. & NEC configured receptacle controlled with a disconnect switch and properly fused according to the kW load specification listed on the kiln nameplate. L&L Kiln Mfg., Inc., also recommends fuses rather than circuit breakers to prevent nuisance tripping.

Model: EL2436-208-3P			
Voltage	208 / 3 / 50-60		
Watts	19,000		
Full Load Amps	L1	L2	L3
	52.7	52.7	52.7
Power Supply	Fuse	Wire	
	70A	4AWG	
Side Elements:	E-Z-2436/2S		
Quantity: 6	Ohms: 9.9		
Door Elements:	E-Z-2436/2D		
Quantity: 6	Ohms: 3.3		

Model: EL2436-240-3P			
Voltage	240 / 3 / 50-60		
Watts	19,000		
Full Load Amps	L1	L2	L3
	45.7	45.7	45.7
Power Supply	Fuse	Wire	
	60A	6AWG	
Side Elements:	E-Z-2436/3S		
Quantity: 6	Ohms: 13.1		
Door Elements:	E-Z-2436/3D		
Quantity: 6	Ohms: 4.4		

EL2436 3 Phase
208V, 240V

L&L KILNS

505 Sharptown Road
Swedesboro NJ 08085
service@hotkilns.com
(856)-294-0077

Drawn by: JS

Rev.	Date	Description
A		

C0055