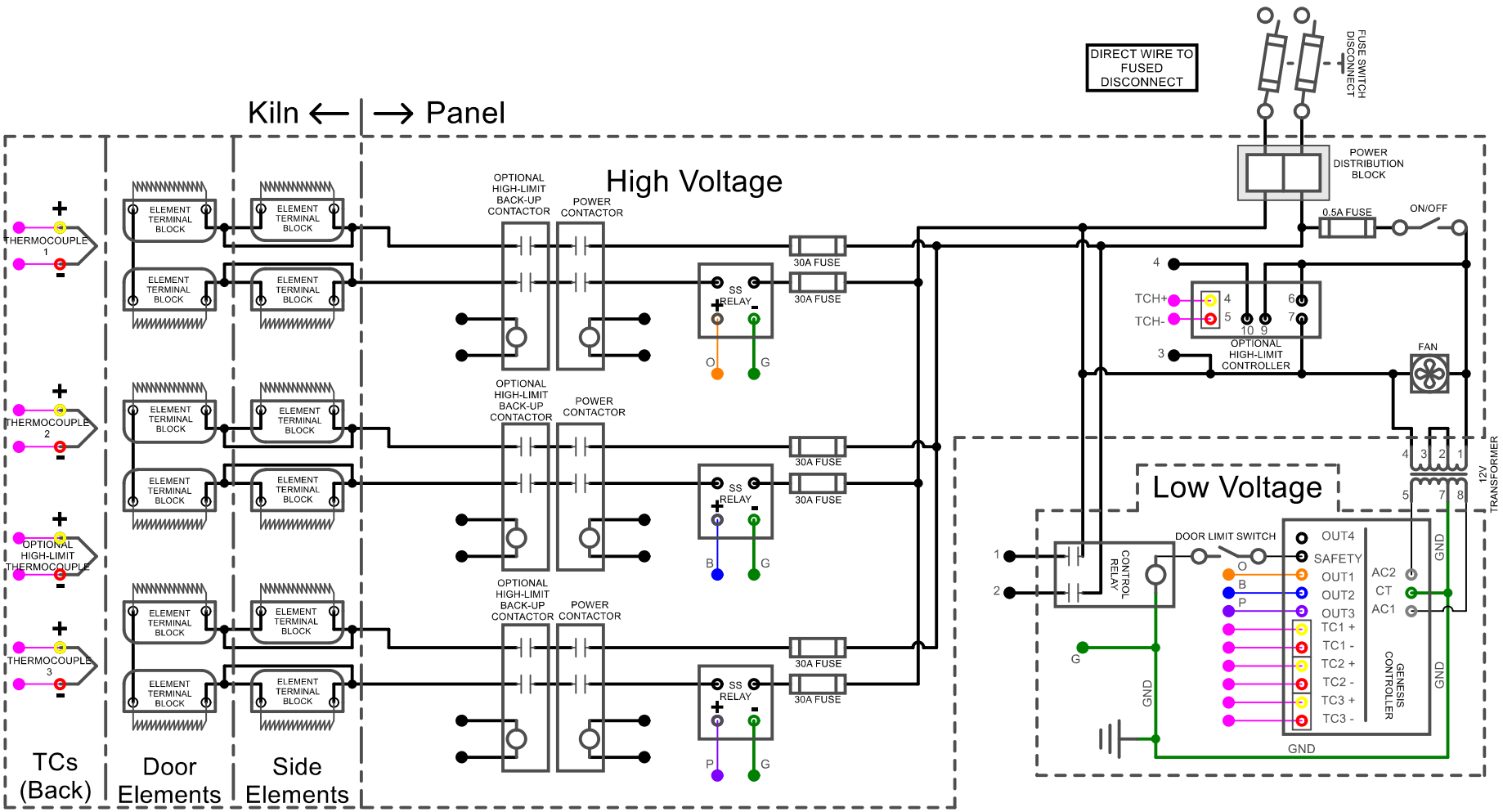

Wiring Information	
Power	6AWG / 150°C / 600V
Control	16AWG / 105°C / 600V
Power Supply Wire Gauge assumes 75°C Copper Wire. See hotkilns.com/wire-size.	

Industrial & commercial applications may require the installation of a LOCKOUT/TAGOUT device to prevent the kiln from operating during maintenance.

This kiln is recommended to be wired & connected to an approved U. L. & NEC configured receptacle controlled with a disconnect switch and properly fused according to the kW load specification listed on the kiln nameplate. L&L Kiln Mfg., Inc., also recommends fuses rather than circuit breakers to prevent nuisance tripping.

Model: EL2436-208			
Voltage	208 / 1 / 50-60		
Watts	19,000		
Full Load Amps	L1	L2	L3
	30.4	30.4	
Power Supply	Fuse	Wire	
	40A	8AWG	
Side Elements:	E-Z-2436/2S		
Quantity: 6	Ohms: 9.9		
Door Elements:	E-Z-2436/2D		
Quantity: 6	Ohms: 3.3		

Model: EL2436-220			
Voltage	220 / 1 / 50-60		
Watts	19,000		
Full Load Amps	L1	L2	L3
	86.4	86.4	
Power Supply	Fuse	Wire	
	110A	2AWG	
Side Elements:	E-Z-2436/4S		
Quantity: 6	Ohms: 11		
Door Elements:	E-Z-2436/4D		
Quantity: 6	Ohms: 3.7		

Model: EL2436-240			
Voltage	240 / 1 / 50-60		
Watts	19,000		
Full Load Amps	L1	L2	L3
	79.2	79.2	
Power Supply	Fuse	Wire	
	100A	3AWG	
Side Elements:	E-Z-2436/3S		
Quantity: 6	Ohms: 13.1		
Door Elements:	E-Z-2436/3D		
Quantity: 6	Ohms: 4.4		

EL2436 1 Phase
208V, 220V, 240V

Rev.	Date	Description
A		

L&L KILNS
505 Sharptown Road
Swedesboro NJ 08085
service@hotkilns.com
(856)-294-0077

Drawn by: JS

C0052