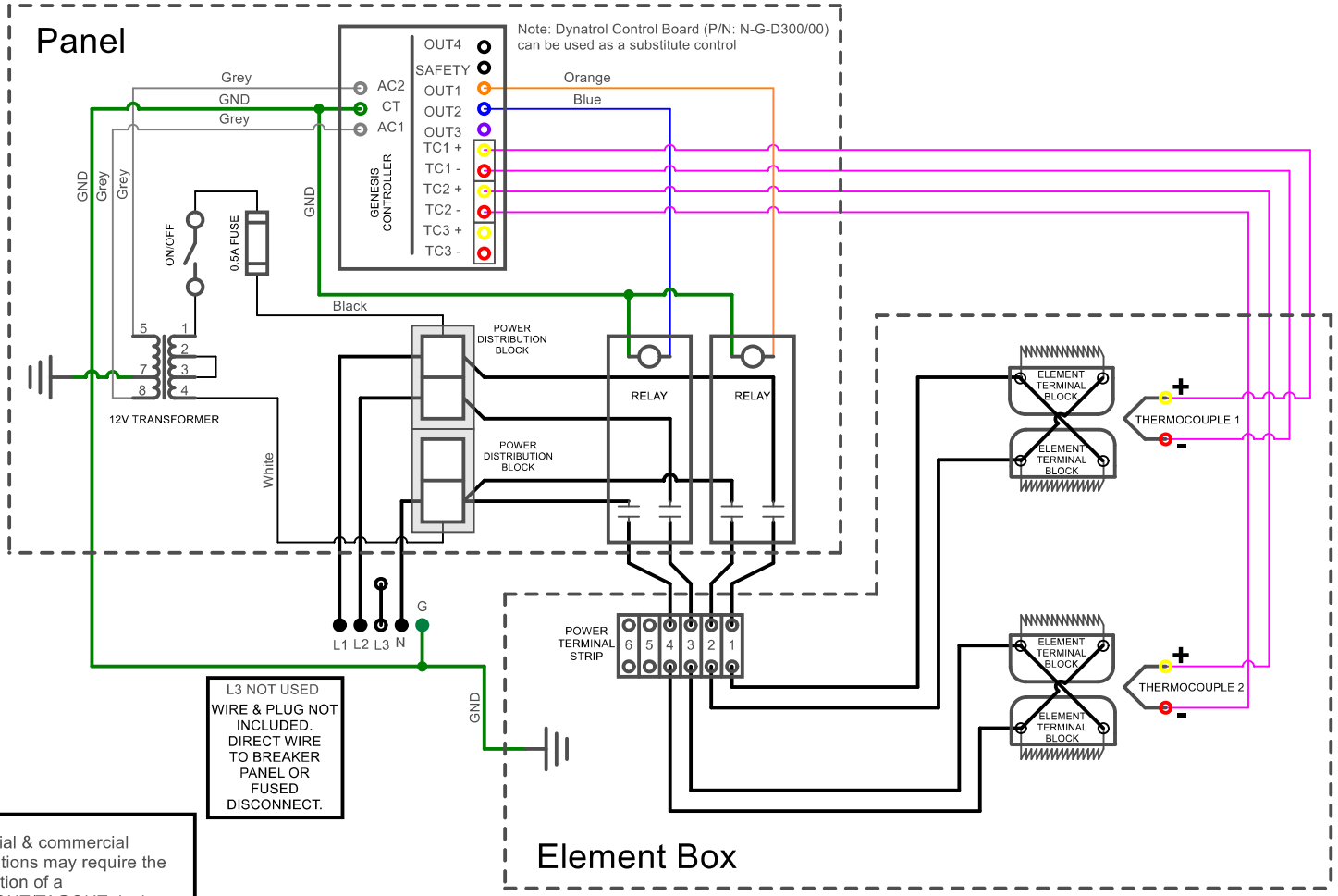

L3 NOT USED
WIRE & PLUG NOT INCLUDED. DIRECT WIRE TO BREAKER PANEL OR FUSED DISCONNECT.

Industrial & commercial applications may require the installation of a LOCKOUT/TAGOUT device to prevent the kiln from operating during maintenance.

This kiln is recommended to be wired & connected to an approved U. L. & NEC configured receptacle controlled with a disconnect switch and properly fused according to the kW load specification listed on the kiln nameplate. L&L Kiln Mfg., Inc., also recommends fuses rather than circuit breakers to prevent nuisance tripping.

Wiring Information	
Power	10AWG / 150°C / 600V
Control	16-22AWG / 105°C / 600V
Power Supply Wire Gauge assumes 75°C Copper Wire. See hotkilns.com/wire-size.	

Model: e23S-380-3PY			
Voltage	380 / 3-Y / 50-60		
Watts	8,660		
Full Load Amps	L1	L2	L3
	19.7	19.7	0
Power Supply	Fuse	Wire	
	25A	12AWG	
Standard Elements: E-E-23SL/41 Quad Elements: E-E-23SU/41			
Quantity: 4	Ohms: 21.5		

Model: e23S-400-3PY			
Voltage	400 / 3-Y / 50-60		
Watts	9,834		
Full Load Amps	L1	L2	L3
	21.4	21.4	0
Power Supply	Fuse	Wire	
	30A	10AWG	
Standard Elements: E-E-23SL/41 Quad Elements: E-E-23SU/41			
Quantity: 4	Ohms: 21.5		

Model: e23S-415-3PY			
Voltage	415 / 3-Y / 50-60		
Watts	9,460		
Full Load Amps	L1	L2	L3
	19.7	19.7	0
Power Supply	Fuse	Wire	
	25A	12AWG	
Standard Elements: E-E-23SL/31 Quad Elements: E-E-23SU/31			
Quantity: 4	Ohms: 23.4		

E23S Easy-Fire 3 Phase Wye
380V, 400V, 415V

L&L KILNS

505 Sharptown Road
Swedesboro NJ 08085
service@hotkilns.com
(856)-294-0077

Drawn by: JS

Rev.	Date	Description	C0021