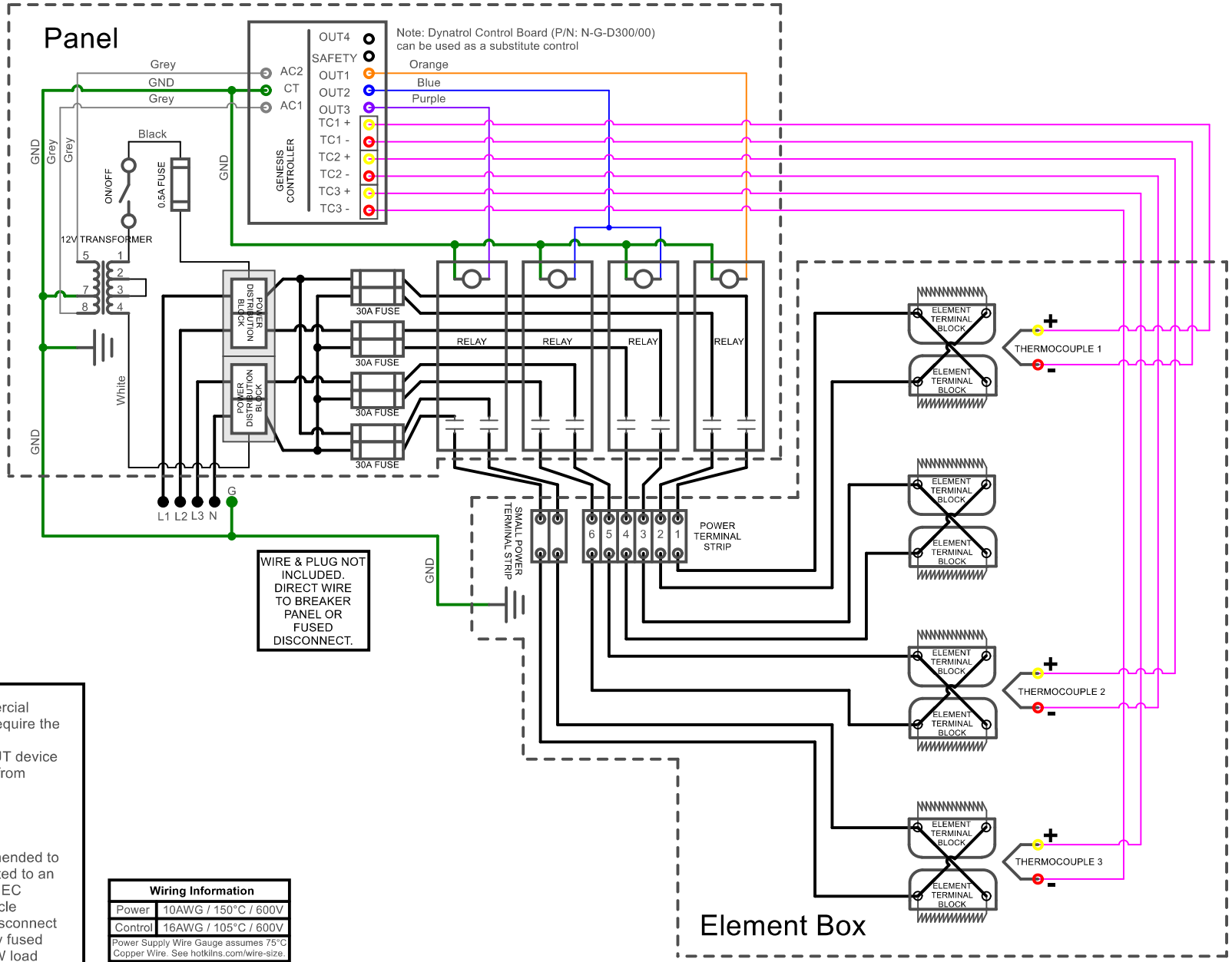

Industrial & commercial applications may require the installation of a LOCKOUT/TAGOUT device to prevent the kiln from operating during maintenance.

This kiln is recommended to be wired & connected to an approved U. L. & NEC configured receptacle controlled with a disconnect switch and properly fused according to the kW load specification listed on the kiln nameplate. L&L Kiln Mfg., Inc., also recommends fuses rather than circuit breakers to prevent nuisance tripping.

Wiring Information	
Power	10AWG / 150°C / 600V
Control	16AWG / 105°C / 600V
Power Supply Wire Gauge assumes 75°C Copper Wire. See hotkilns.com/wire-size.	

Model: eQ2836-380-3PY			
Voltage	380 / 3-Y / 50-60		
Watts	19,000		
Full Load Amps	L1	L2	L3
	43.2	21.6	21.6
Power Supply	Fuse	Wire	
	60A	6AWG	
Elements E-Q-2836/40	QTY	OHMS	
	8	19.6	

Model: eQ2836-400-3PY			
Voltage	400 / 3-Y / 50-60		
Watts	21,576		
Full Load Amps	L1	L2	L3
	46.9	23.5	23.5
Power Supply	Fuse	Wire	
	60A	6AWG	
Elements E-Q-2836/40	QTY	OHMS	
	8	19.6	

Model: eQ2836-415-3PY			
Voltage	415 / 3-Y / 50-60		
Watts	19,000		
Full Load Amps	L1	L2	L3
	39.6	19.8	19.8
Power Supply	Fuse	Wire	
	50A	8AWG	
Elements E-Q-2836/30	QTY	OHMS	
	8	23.3	

eQ2836 eQuad-Pro 3 Phase Wye
380V, 400V, 415V

L&L KILNS

505 Sharptown Road
Swedesboro NJ 08085
service@hotkilns.com
(856)-294-0077

Drawn by: JS

Rev.	Date	Description

C0093