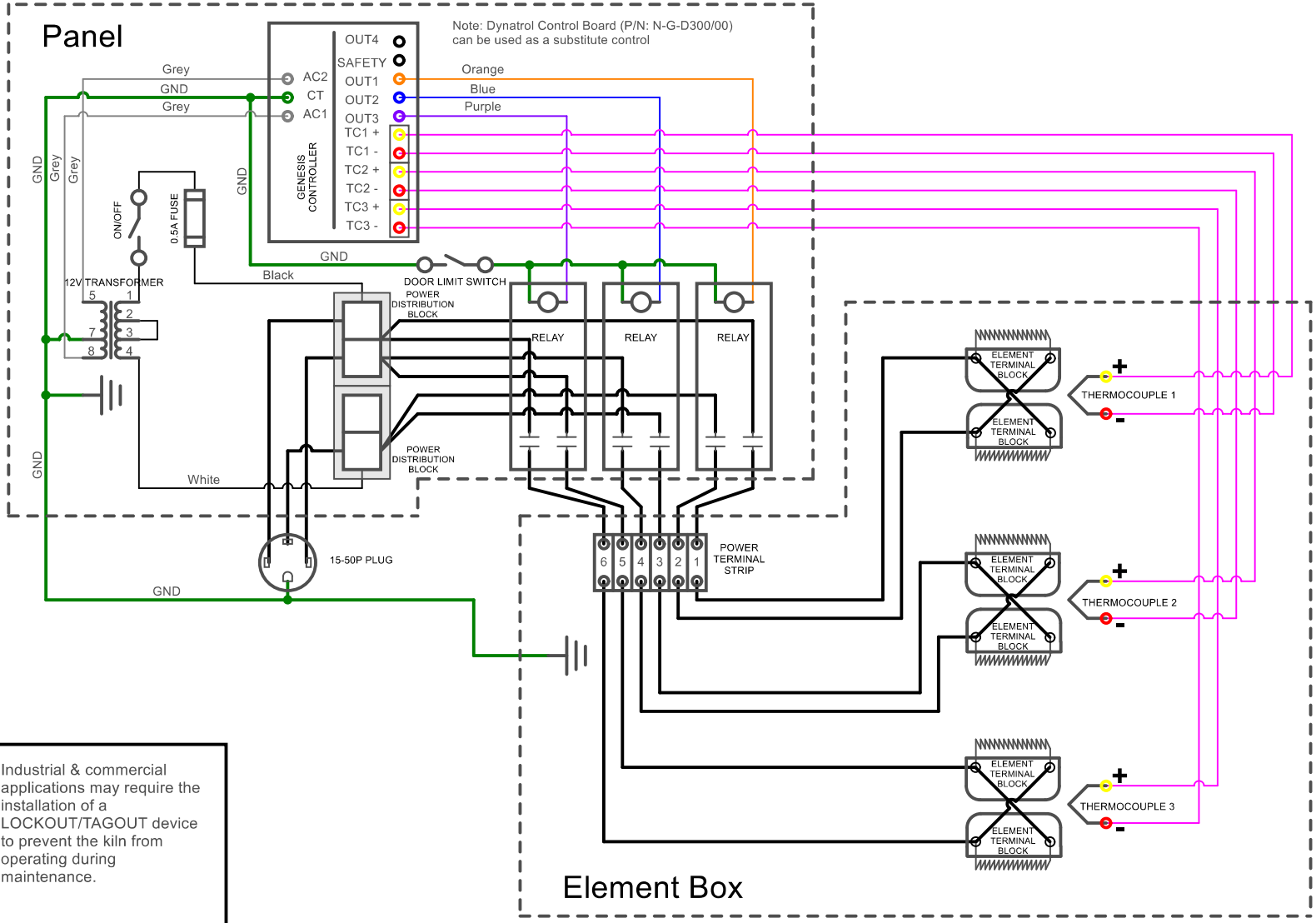

Industrial & commercial applications may require the installation of a LOCKOUT/TAGOUT device to prevent the kiln from operating during maintenance.

This kiln is recommended to be wired & connected to an approved U. L. & NEC configured receptacle controlled with a disconnect switch and properly fused according to the kW load specification listed on the kiln nameplate. L&L Kiln Mfg., Inc., also recommends fuses rather than circuit breakers to prevent nuisance tripping.

Wiring Information	
Power	10AWG / 150°C / 600V
Control	16AWG / 105°C / 600V
Power Supply Wire Gauge assumes 75°C Copper Wire. See hotkilns.com/wire-size.	

Model: eFL2626-208-3P			
Voltage	208 / 3 / 50-60		
Watts	15,360		
Full Load Amps	L1	L2	L3
	42.6	42.6	42.6
Power Supply	Fuse	Wire	
	60A	6AWG	
Elements E-H-2626/21	QTY	OHMS	
	6	16.3	

Model: eFL2626-240-3P			
Voltage	240 / 3 / 50-60		
Watts	15,360		
Full Load Amps	L1	L2	L3
	37.0	37.0	37.0
Power Supply	Fuse	Wire	
	50A	8AWG	
Elements E-H-2626/31	QTY	OHMS	
	6	21.7	

eFL2626 3 Phase
208V, 240V

L&L KILNS

505 Sharptown Road
Swedesboro NJ 08085
service@hotkilns.com
(856)-294-0077

Drawn by: JS

Rev.	Date	Description	C0081