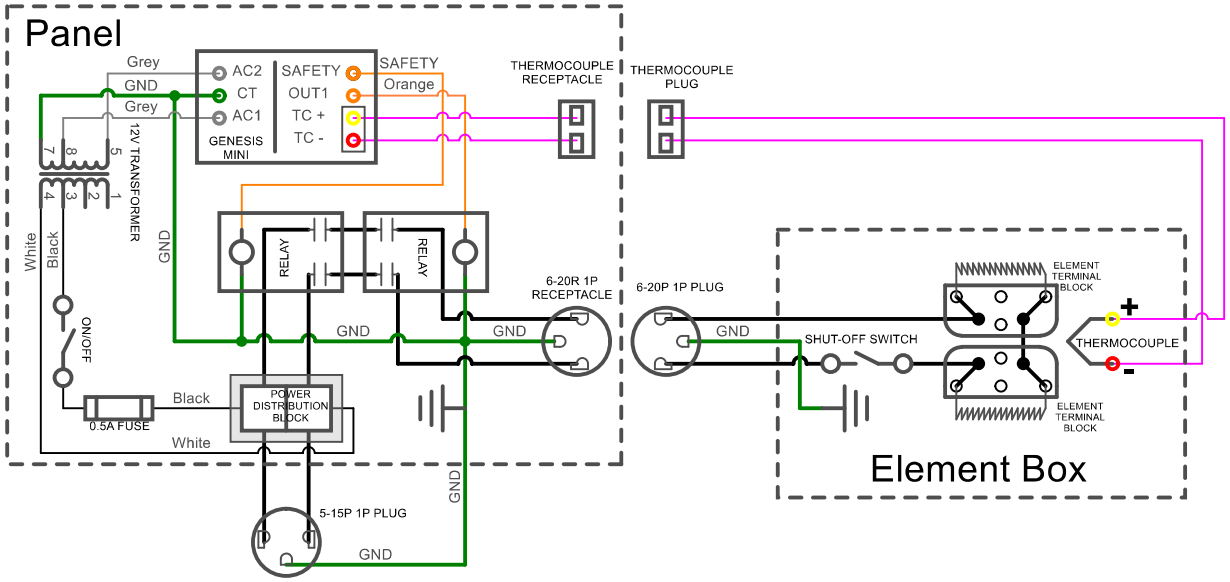

Wiring Information	
Power	14AWG / 150°C / 600V
Control	16AWG / 105°C / 600V
Power Supply Wire Gauge assumes 75°C Copper Wire. See hotkilns.com/wire-size.	

Model: PF8-120			
Voltage	110-120 / 1 / 50-60		
Watts	~1,500		
Full Load Amps	L1	L2	L3
	~12.5	~12.5	
Power Supply	Fuse	Wire	
	15A	14AWG	
Elements E-D-PF8X/10	QTY	OHMS	
	2	4.5	

PF8 Plug-n-Fire 110V-120V			L&L KILNS
			505 Sharptown Road Swedesboro NJ 08085 service@hotkilns.com (856)-294-0077
A	1/25/2025	New ETBs, Updated AC Wires and Wiring Information, Added Safety Relay, Rearranged Components	Drawn by: JS
Rev.	Date	Description	E080-150