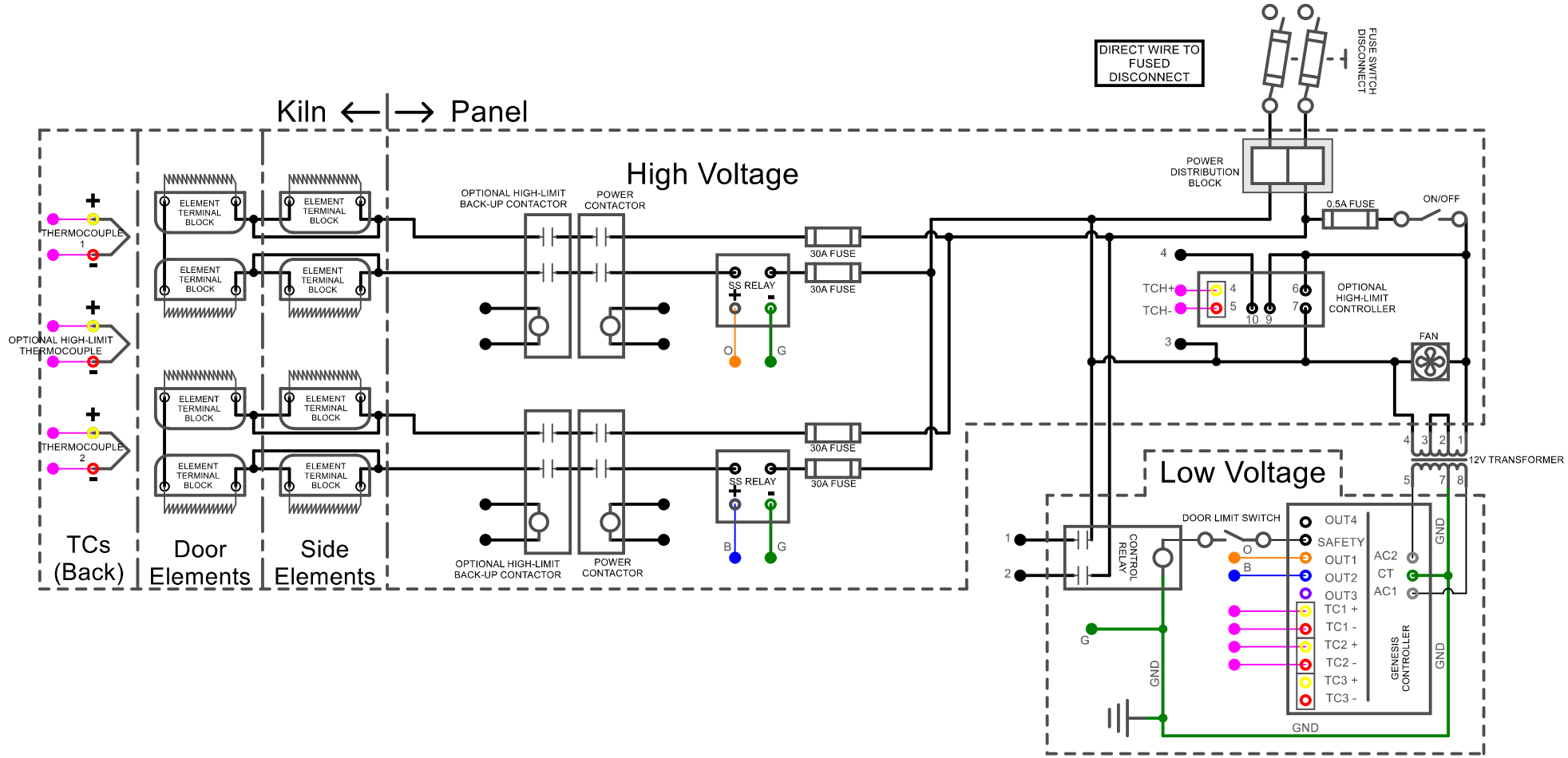

Wiring Information	
Power	6AWG / 150°C / 600V
Control	16AWG / 105°C / 600V
Power Supply Wire Gauge assumes 75°C Copper Wire. See hotkilns.com/wire-size.	

Industrial & commercial applications may require the installation of a LOCKOUT/TAGOUT device to prevent the kiln from operating during maintenance.

This kiln is recommended to be wired & connected to an approved U. L. & NEC configured receptacle controlled with a disconnect switch and properly fused according to the kW load specification listed on the kiln nameplate. L&L Kiln Mfg., Inc., also recommends fuses rather than circuit breakers to prevent nuisance tripping.

Model: EL2424-208			
Voltage	208 / 1 / 50-60		
Watts	15,000		
Full Load Amps	L1	L2	L3
	72.1	72.1	
Power Supply	Fuse	Wire	
	100A	3AWG	
Side Elements:			
Quantity: 4	Ohms:		
Door Elements:			
Quantity: 4	Ohms:		

Model: EL2424-220			
Voltage	220 / 1 / 50-60		
Watts	15,000		
Full Load Amps	L1	L2	L3
	68.2	68.2	
Power Supply	Fuse	Wire	
	90A	3AWG	
Side Elements:			
Quantity: 4	Ohms:		
Door Elements: E-Z-3048/4D			
Quantity: 4	Ohms:		

Model: EL2424-240			
Voltage	240 / 1 / 50-60		
Watts	15,000		
Full Load Amps	L1	L2	L3
	62.5	62.5	
Power Supply	Fuse	Wire	
	80A	4AWG	
Side Elements:			
Quantity: 4	Ohms:		
Door Elements:			
Quantity: 4	Ohms:		

EL2424 1 Phase
208V, 220V, 240V

L&L KILNS

505 Sharptown Road
Swedesboro NJ 08085
service@hotkilns.com
(856)-294-0077

Drawn by: JS

Rev.	Date	Description	C0045