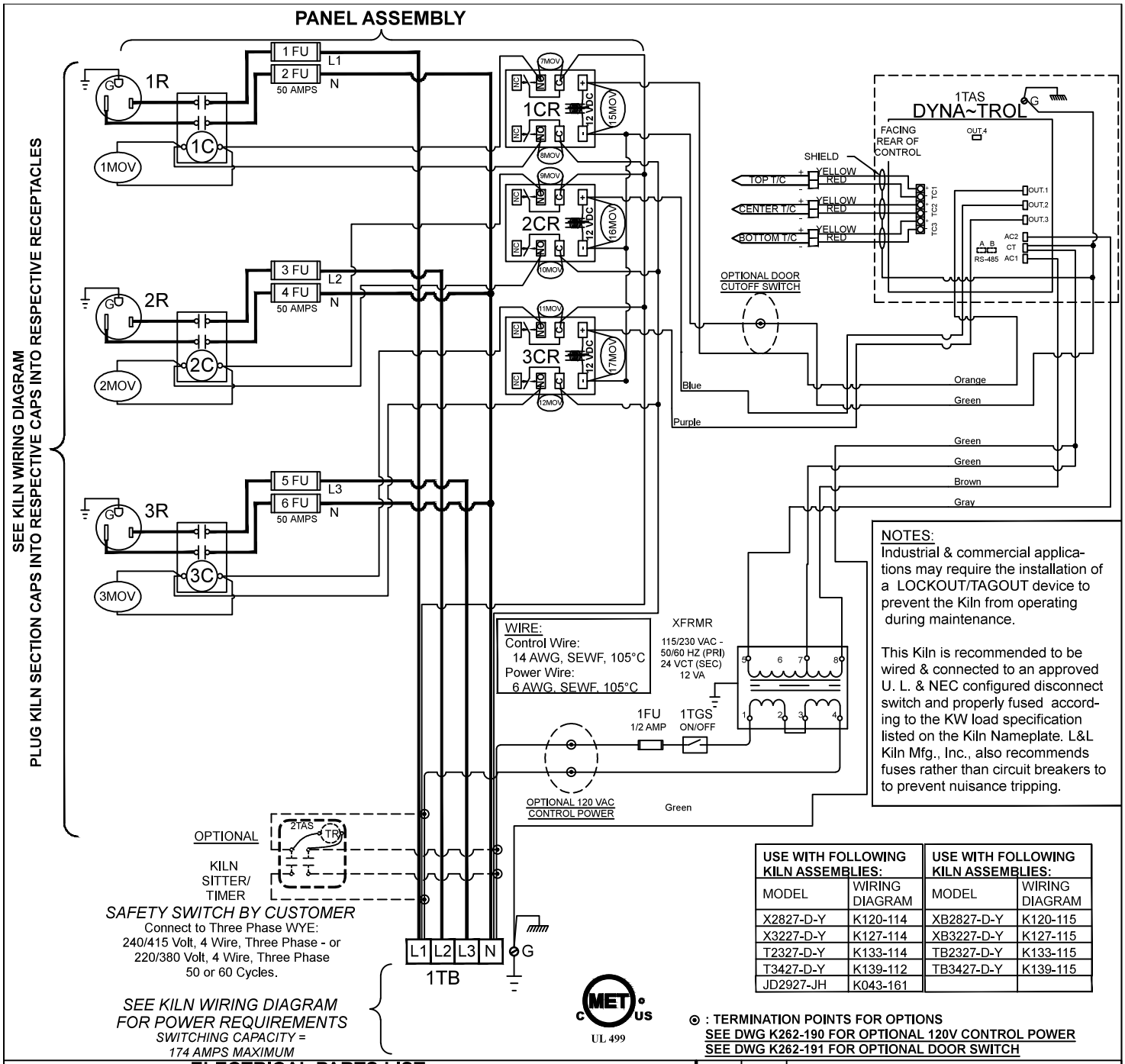

NOTES:
Industrial & commercial applications may require the installation of a LOCKOUT/TAGOUT device to prevent the Kiln from operating during maintenance.

This Kiln is recommended to be wired & connected to an approved U. L. & NEC configured disconnect switch and properly fused according to the KW load specification listed on the Kiln Nameplate. L&L Kiln Mfg., Inc., also recommends fuses rather than circuit breakers to to prevent nuisance tripping.

USE WITH FOLLOWING KILN ASSEMBLIES:		USE WITH FOLLOWING KILN ASSEMBLIES:	
MODEL	WIRING DIAGRAM	MODEL	WIRING DIAGRAM
X2827-D-Y	K120-114	XB2827-D-Y	K120-115
X3227-D-Y	K127-114	XB3227-D-Y	K127-115
T2327-D-Y	K133-114	TB2327-D-Y	K133-115
T3427-D-Y	K139-112	TB3427-D-Y	K139-115
JD2927-JH	K043-161		

⊙ : TERMINATION POINTS FOR OPTIONS
SEE DWG K262-190 FOR OPTIONAL 120V CONTROL POWER
SEE DWG K262-191 FOR OPTIONAL DOOR SWITCH

ELECTRICAL PARTS LIST

SYMBOL	QTY	DESCRIPTION	CUSTOMER PART NO.
1TB	2	POWER CONNECTION BOARD	L-G-PBLG/01
1TAS	1	BARTLETT DYNATROL	N-G-D300/00
T/C	3	THERMOCOUPLES (8 Ga)	T-G-E800/00
CR	3	POWER RELAYS	L-G-RL25/12
1FU	1	CONTROL FUSE	L-C-FS05/00
1FUB	1	PANEL MOUNT FUSE HOLDER	L-G-FSPB/00
1TGS	1	ON/OFF TOGGLE SWITCH	L-G-SWTG/00
XFRMR	1	STEP DOWN TRANSFORMER	L-G-TR24/00
15-18MOV	3	31 VOLT SURGE SUPPRESSORS	L-G-MOV0/00
C	3	POWER CONTACTORS	L-G-RL50/30
1-5,B,7-14MOV	9	250 VOLTS SURGE SUPPRESSORS	L-G-MOV1/00
FU	6	ELEMENT FUSES	L-G-FS50/NL
FUB	3	ELEMENT FUSE BLOCKS	L-G-FH60/20
R	3	SINGLE RECEPTACLE NEMA 6-50R	L-G-SR50/00
2TAS	1 (OPT)	KILN SITTER	N-G-LT30/00
2TAS	1 (OPT)	50 HZ KILN SITTER	N-G-LT30/50

REV#	DATE	REVISION DESCRIPTION
C	6/29/12	ADDED JH KILN ASSEMBLY & TB MODELS
B	5/30/12	CHANGED TO PANEL MOUNT
A	7/6/09	ADDED MET CERTIFIED MARK & NEW LOGO
0	7/5/05	FIRST ISSUE

LL Kilns
hotkilns.com
505 SHARPTOWN ROAD
SWEDESBORO, NJ 08085
PHONE:(856) 294-0077
FAX: (856) 294-0070

TITLE
CONTROL WIRING DIAGRAM WITH PANEL MOUNTED DYNA~TROL

For 3 Ph-Wye KILN with (3) 50 Amp Sections & Branch Circuit Fusing / No Power Bottom

DRAWN BY A.H.		REV. CODE	DRAWING NO.
DATE 5/30/12	SCALE 1 = 8	C	K264-160a
CHK	APP		
JOB NO	SER NO		SHEET NO. OF
FILE NAME L:\E\L\LLKILN\WIRDGCTL \K264-160a.dwg		MADE FROM \K264-160.dwg	